WEENIE GENIE

Hot Dog
Cart Company

Right Side View:

734-507-1212

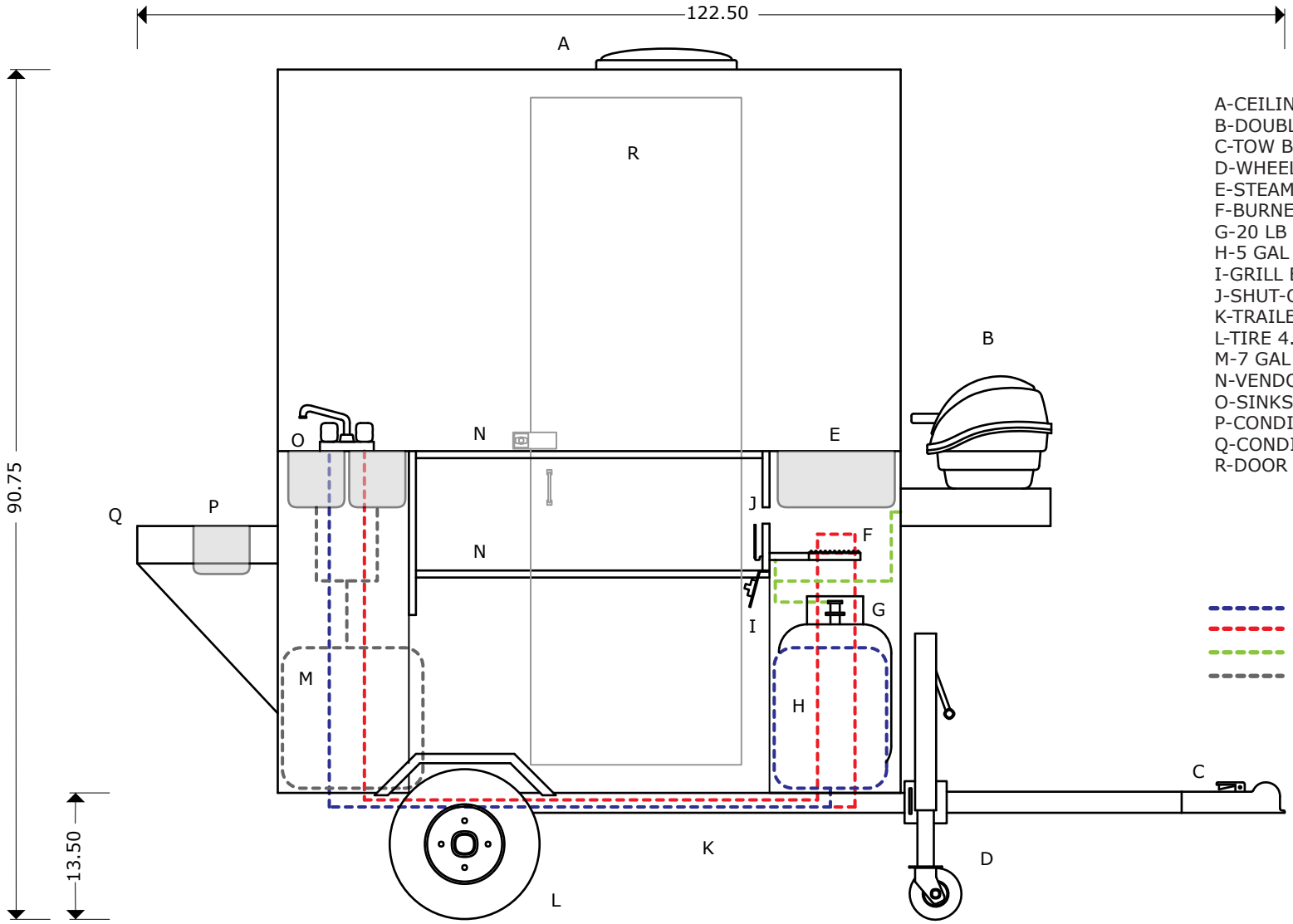

A-CEILING VENT
B-DOUBLE-DECKER GRILL
C-TOW BAR w/BALL COUPLER
D-WHEEL LEVELING JACK
E-STEAM PAN
F-BURNER
G-20 LB PROPANE TANK
H-5 GAL FRESHWATER TANK
I-GRILL BURNER CONTROLS
J-SHUT-OFF VALVE
K-TRAILER
L-TIRE 4.8x8 STANDARD
M-7 GAL WASTE WATER TANK
N-VENDOR SHELF
O-SINKS
P-CONDIMENT CONTAINER
Q-CONDIMENT TABLE
R-DOOR

Cold water line
Hot water line
Gas line
Wastewater line

www.hotdogcartcompany.com

4497 Springbrook Rd., Jackson, MI 49201