WEENIE GENIE

Hot Dog Cart Company

Left Side View:

734-507-1212

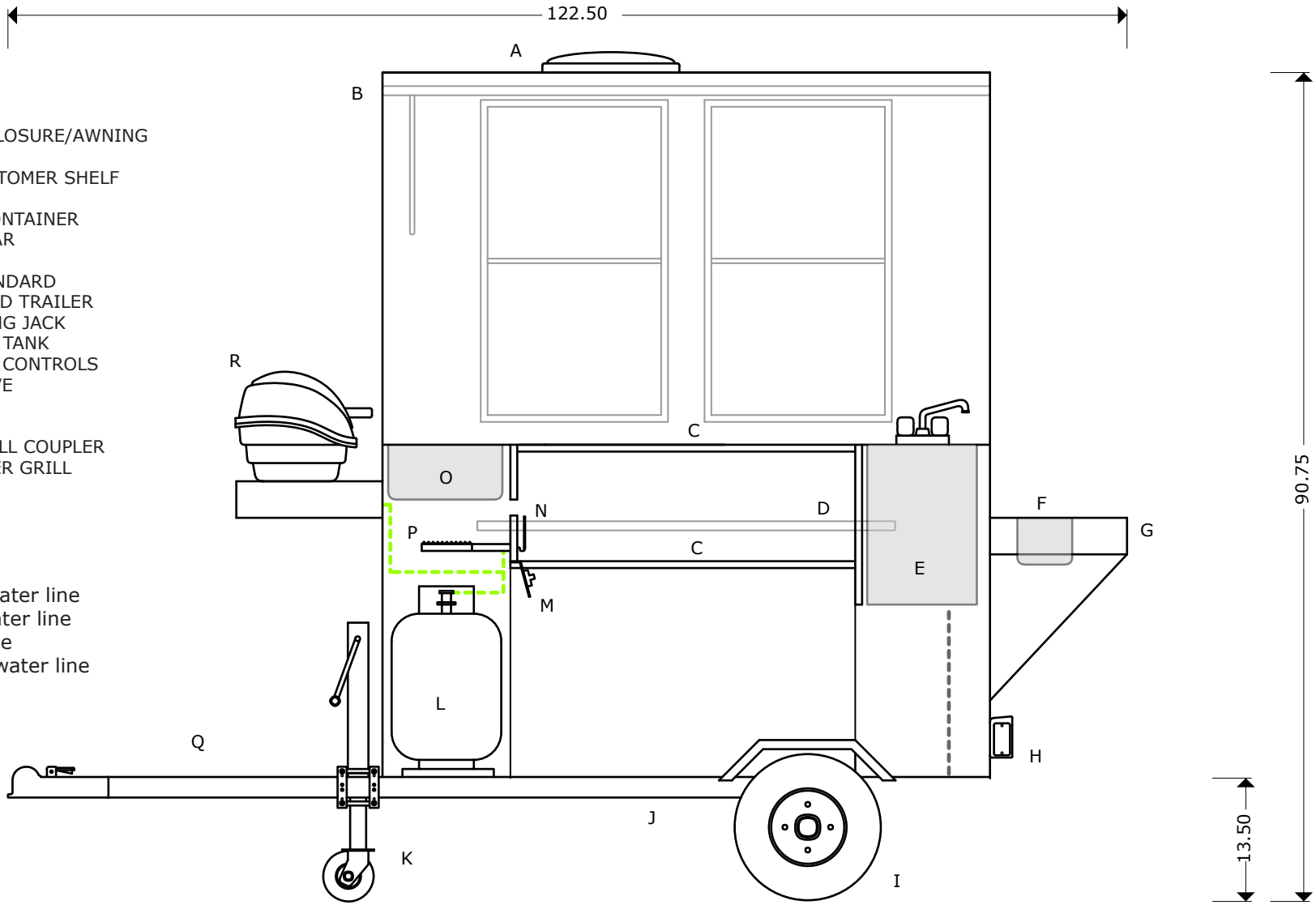

A-CEILING VENT
B-EXTERIOR ENCLOSURE/AWNING
C-VENDOR SHELF
D-EXTERIOR CUSTOMER SHELF
E-BEVERAGE BIN
F-CONDIMENT CONTAINER
G-CONDIMENT BAR
H-TAIL LIGHT
I-TIRE 4.8x8 STANDARD
J-D.O.T. APPROVED TRAILER
K-WHEEL LEVELING JACK
L-20 LB PROPANE TANK
M-GRILL BURNER CONTROLS
N-SHUT-OFF VALVE
O-STEAM PAN
P-BURNER
Q-TOW BAR w/BALL COUPLER
R-DOUBLE-DECKER GRILL

Cold water line
Hot water line
Gas line
Wastewater line

www.hotdogcartcompany.com

4497 Springbrook Rd., Jackson, MI 49201