HYBRID

Hot Dog
Cart Company

Right Side View:

734-507-1212

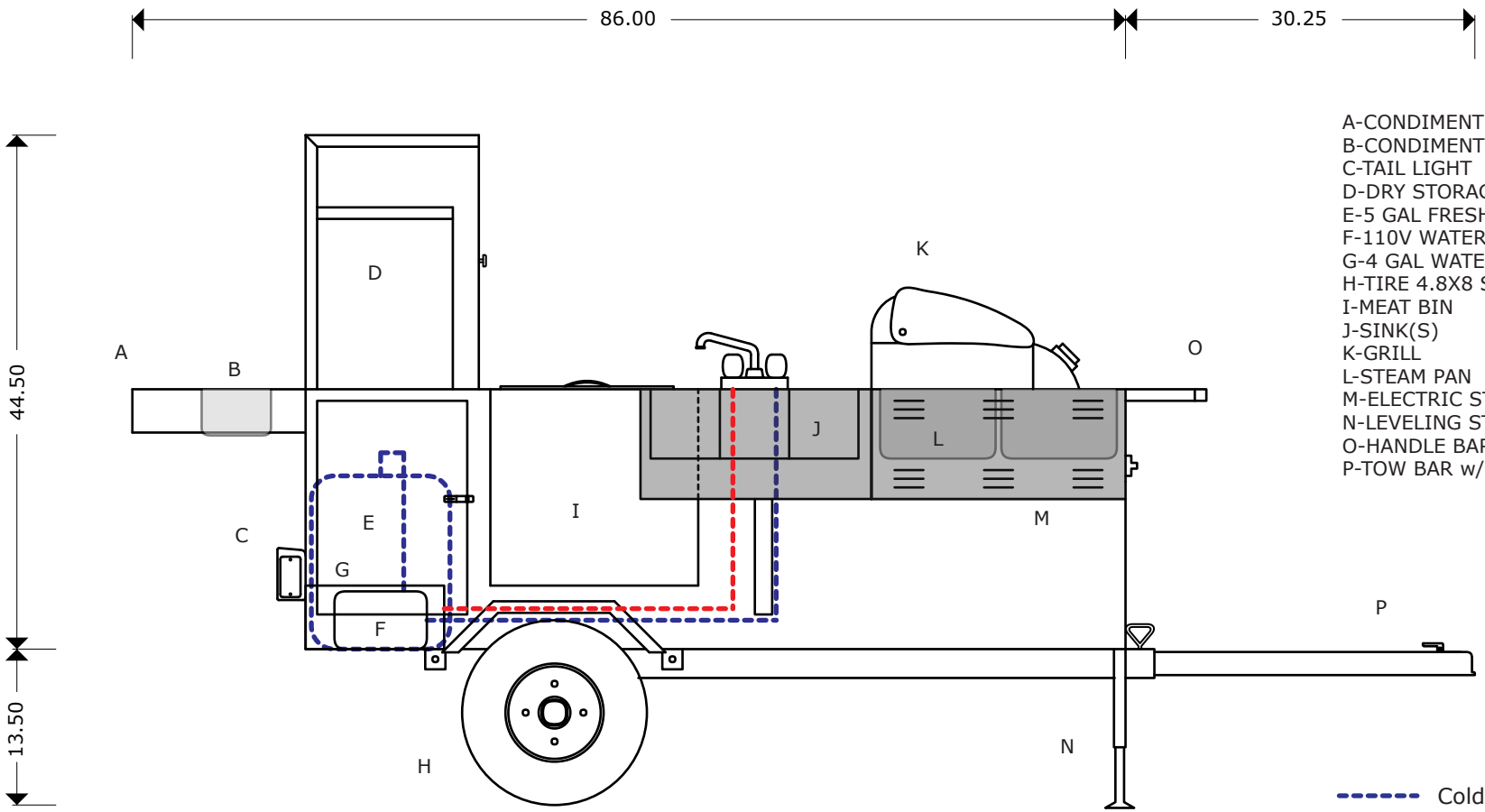

A-CONDIMENT TABLE
B-CONDIMENT PAN
C-TAIL LIGHT
D-DRY STORAGE
E-5 GAL FRESH WATER TANK
F-110V WATER PUMP
G-4 GAL WATER HEATER
H-TIRE 4.8X8 STANDARD
I-MEAT BIN
J-SINK(S)
K-GRILL
L-STEAM PAN
M-ELECTRIC STEAMER
N-LEVELING STAND
O-HANDLE BAR
P-TOW BAR w/BALL COUPLER

Cold water line
Hot water line
Gas line
Wastewater line

www.hotdogcartcompany.com

4497 Springbrook Rd., Jackson, MI 49201